S9D-3140

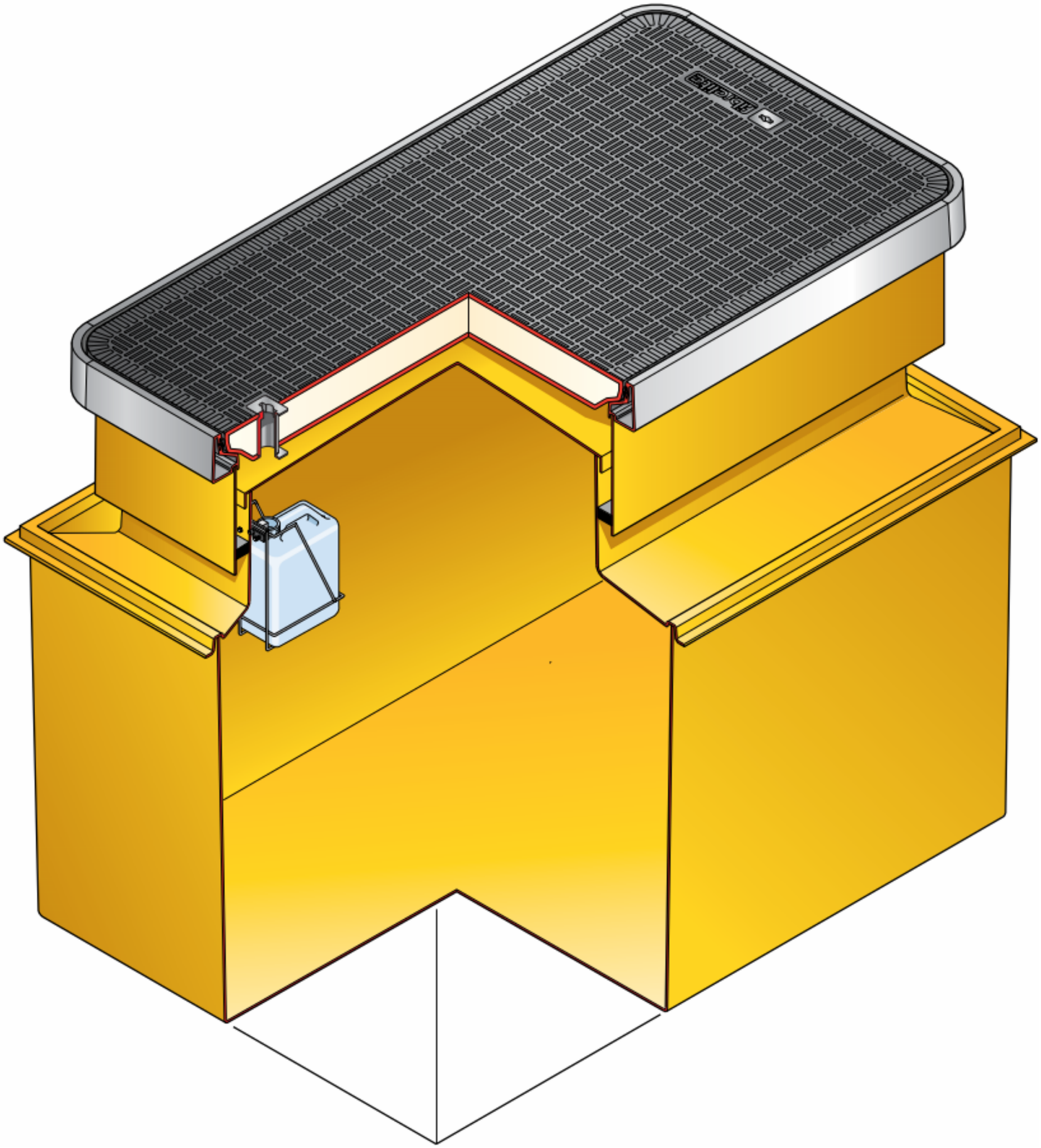

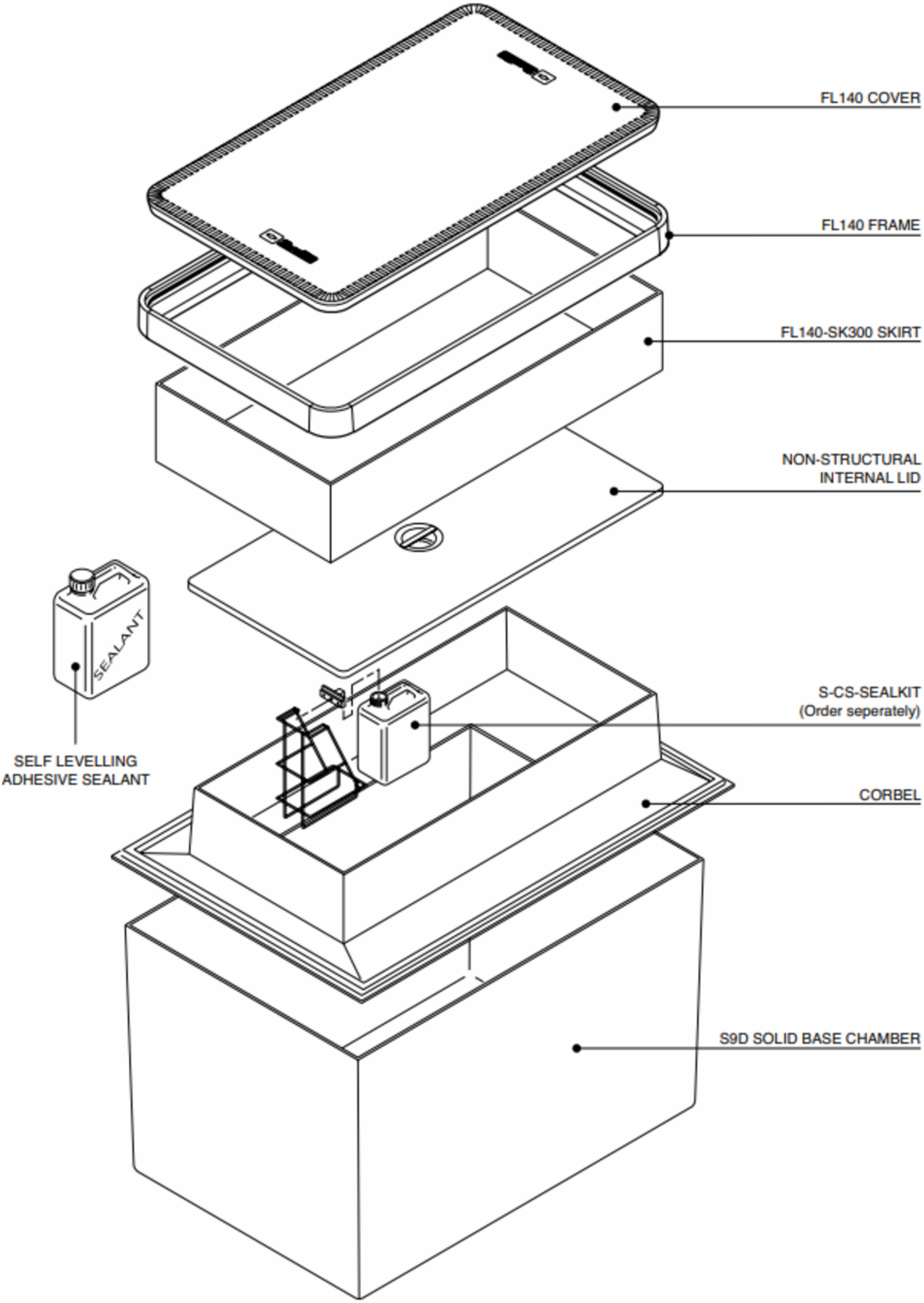
FL140 COVER
FL140 FRAME
FL140-SK300 SKIRT
NON-STRUCTURAL INTERNAL LID
SEALANT
SELF LEVELLING ADHESIVE SEALANT
S-CS-SEALKIT (Order seperately)
CORBEL
S9D SOLID BASE CHAMBER

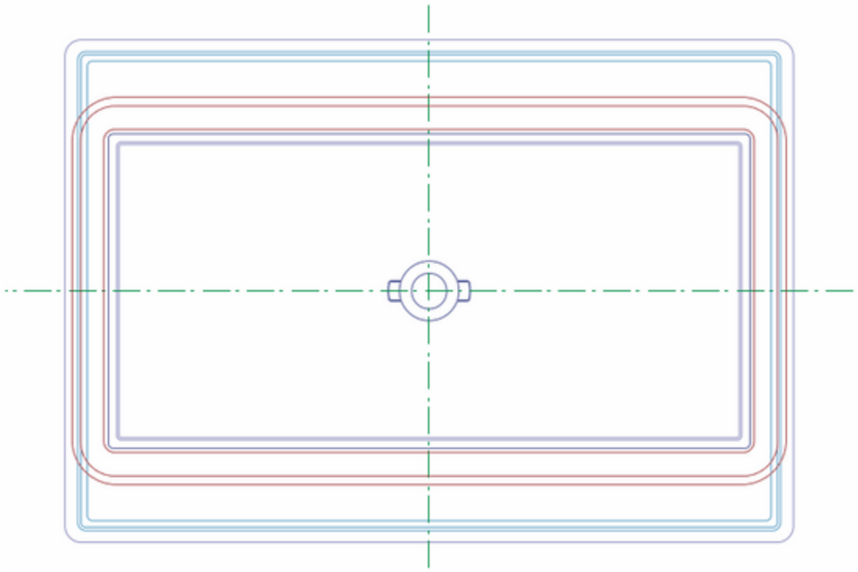

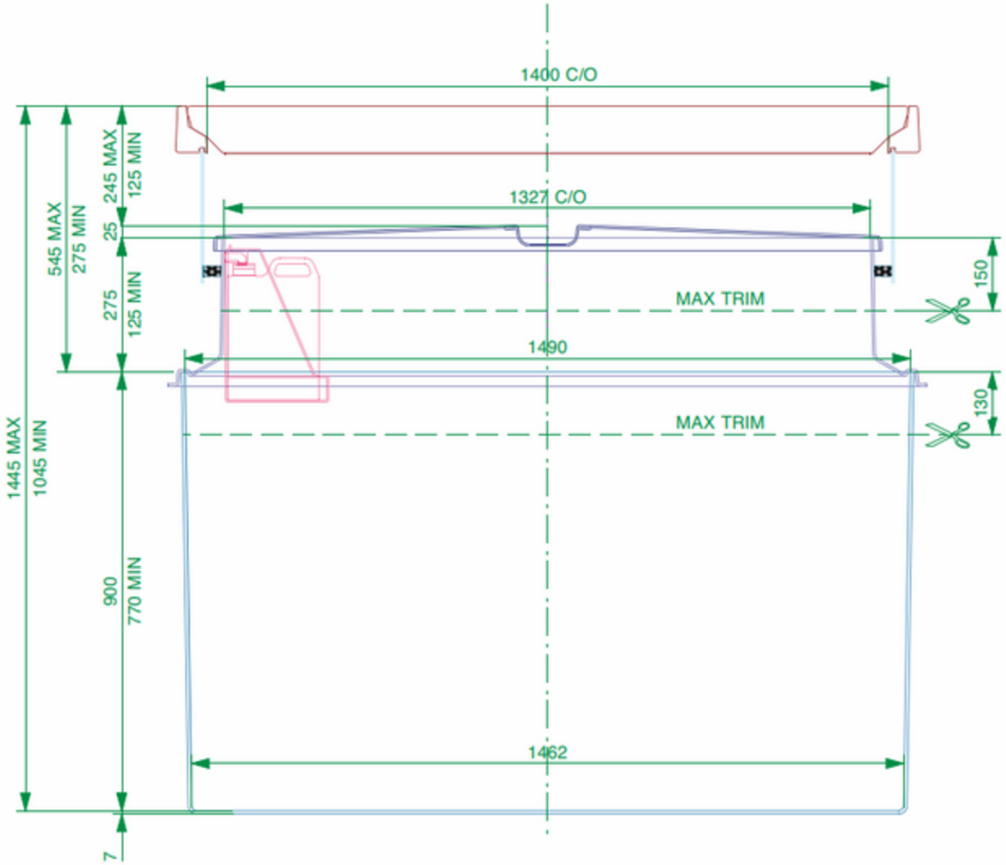
1400 C/O
1327 C/O
1490
1462
MAX TRIM
MAX TRIM
150
130
1445 MAX
1045 MIN
545 MAX
275 MIN
245 MAX
125 MIN
25
275
125 MIN
900
770 MIN
7

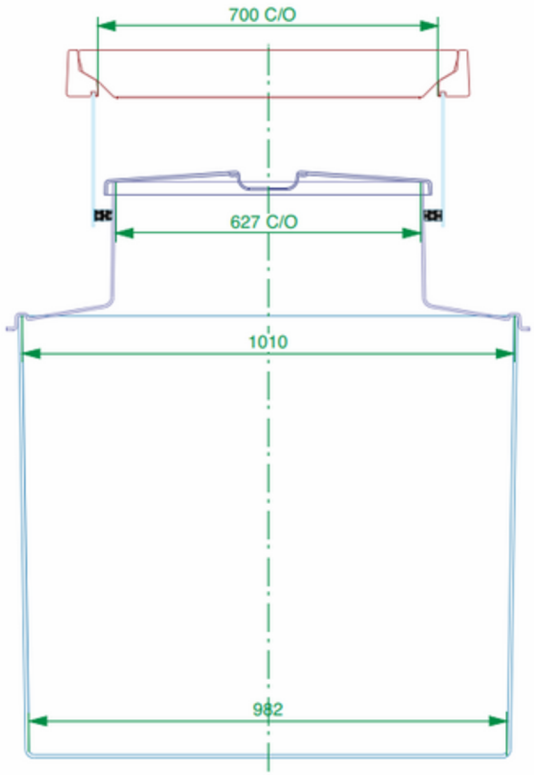
700 C/O
627 C/O
1010
982

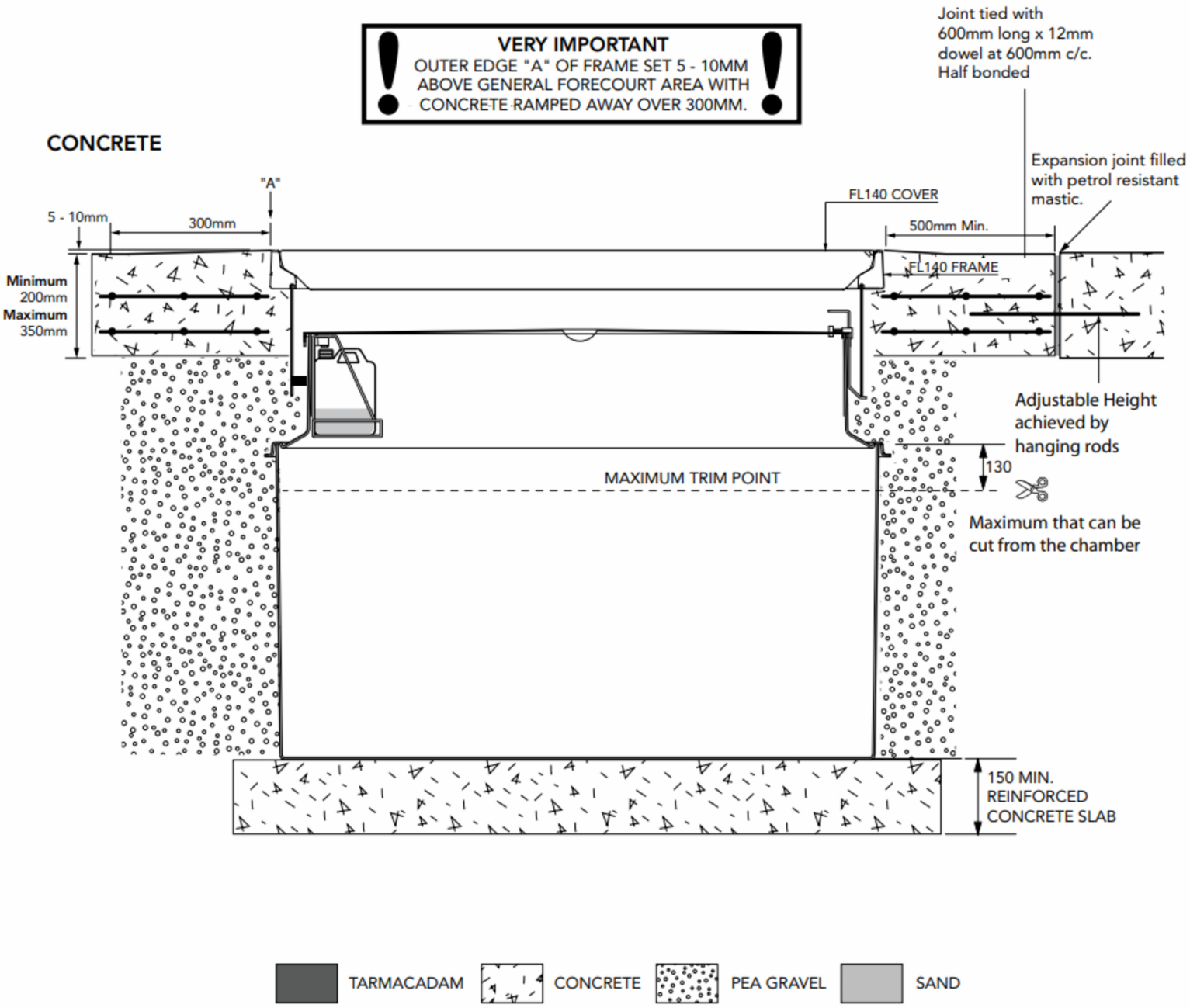
VERY IMPORTANT
OUTER EDGE "A" OF FRAME SET 5 - 10MM ABOVE GENERAL FORECOURT AREA WITH CONCRETE RAMPED AWAY OVER 300MM.
CONCRETE
"A"
5 - 10mm
300mm
Minimum 200mm
Maximum 350mm
FL140 COVER
500mm Min.
FL140 FRAME
Joint tied with 600mm long x 12mm dowel at 600mm c/c. Half bonded
Expansion joint filled with petrol resistant mastic.
Adjustable Height achieved by hanging rods
130
MAXIMUM TRIM POINT
Maximum that can be cut from the chamber
150 MIN. REINFORCED CONCRETE SLAB
TARMACADAM
CONCRETE
PEA GRAVEL
SAND